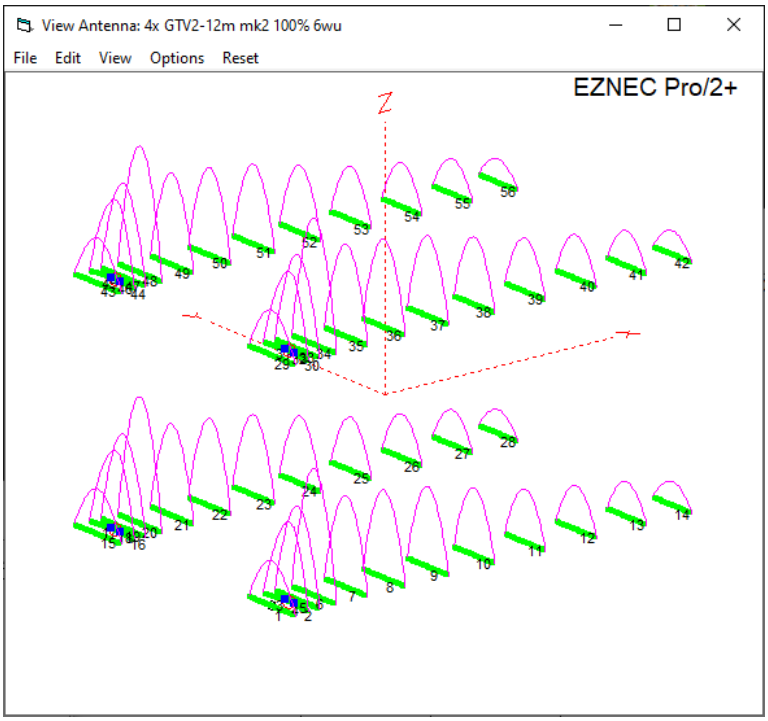

4 x GTV 2-12m mk2, EZNEC wires window

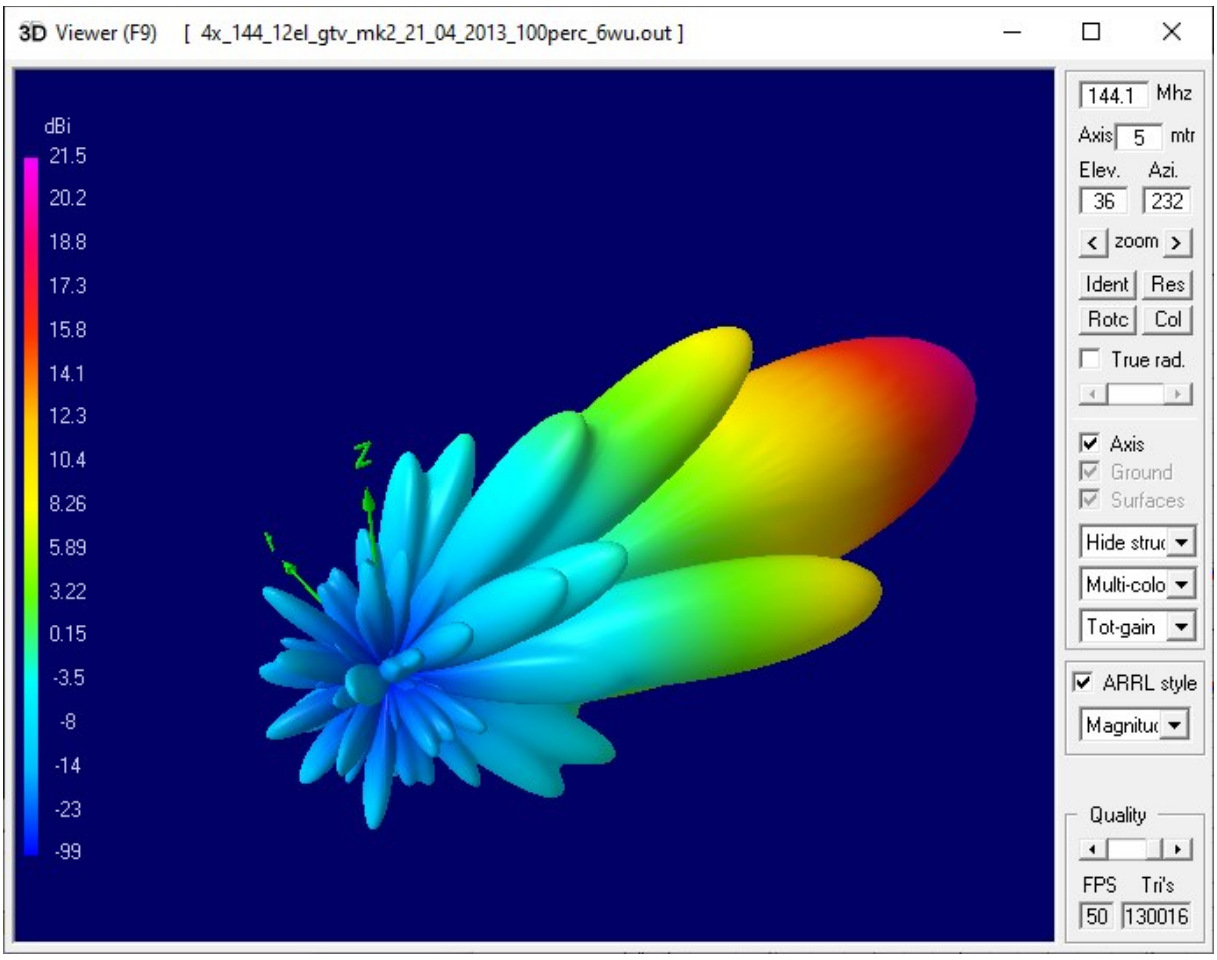

4 x GTV 2-12m mk2, 100% DL6WU, 4nec2 3D viewer

Single Yagi Data:

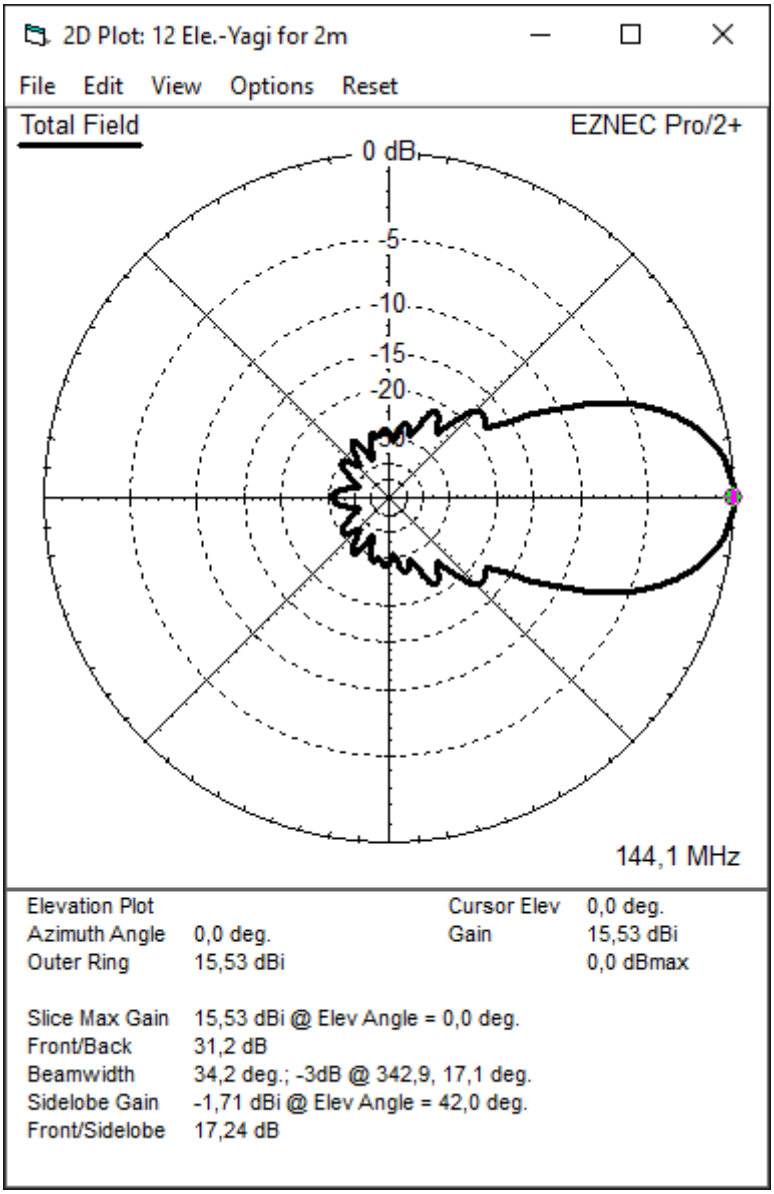

Elevation radiation plot

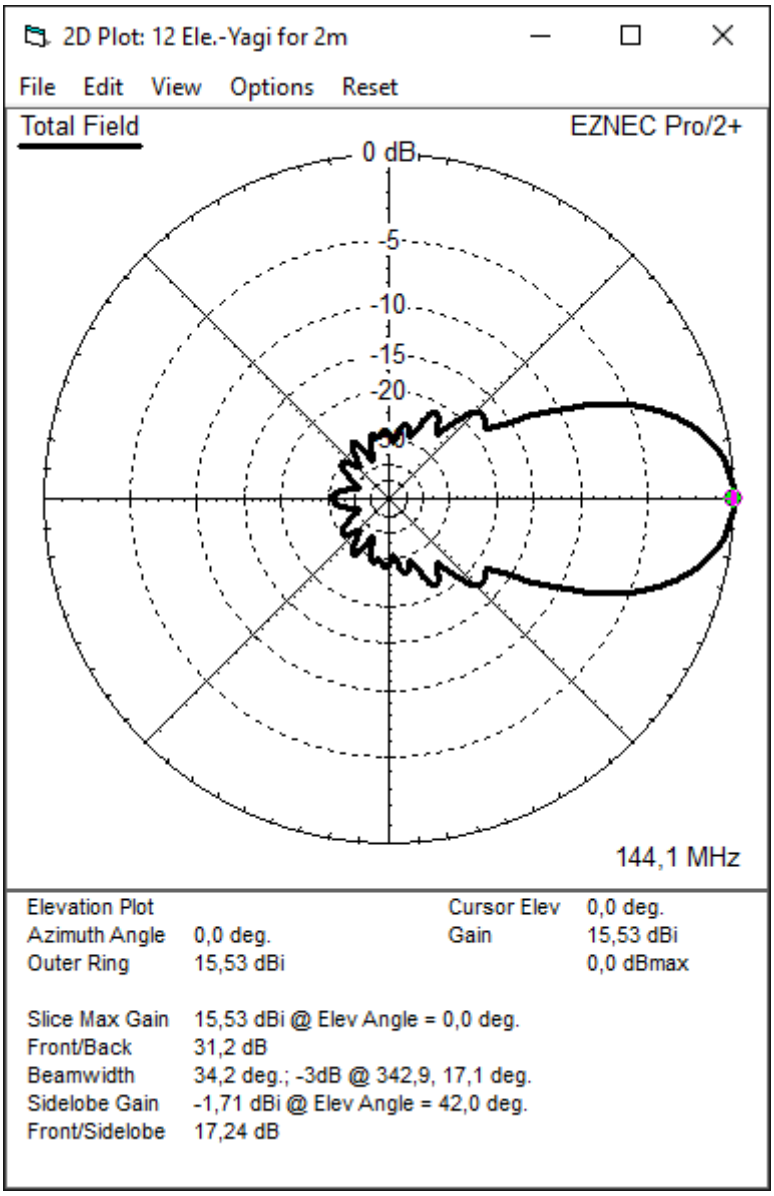

Azimuth radiation plot

Elevation HBPW:	34.2°
Azimuth HPBW:	32.0°

110% Stacking distance according DL6WU:

E-plane: 4.151 m
H-plane: 3.891 m

100% Stacking distance according DL6WU:

E-plane: 3.774 m
H-plane: 3.538 m

90% Stacking distance according DL6WU:

E-plane: 3.396 m
H-plane: 3.184 m

• **Radiation plots at 110% Stacking distance according DL6WU**

E-plane: 4.151 m
H-plane: 3.891 m

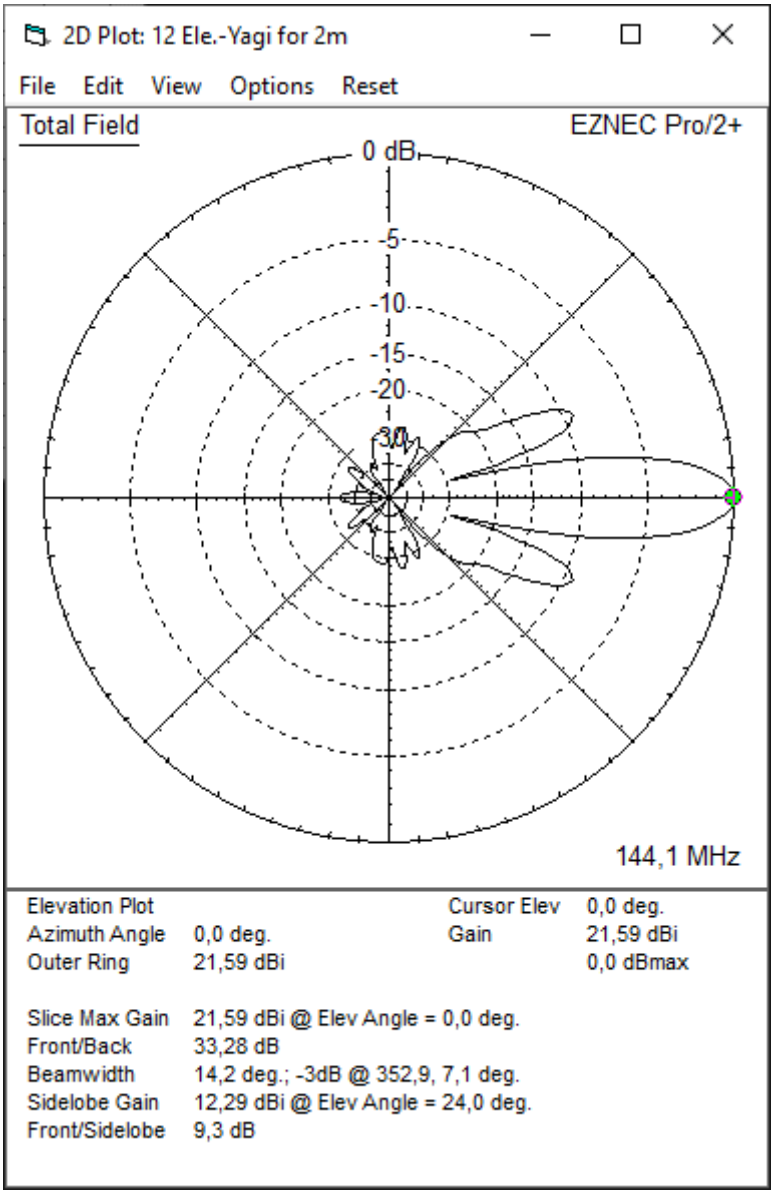

4 x GTV 2-12m mk2, 110% DL6WU, Elevation plot

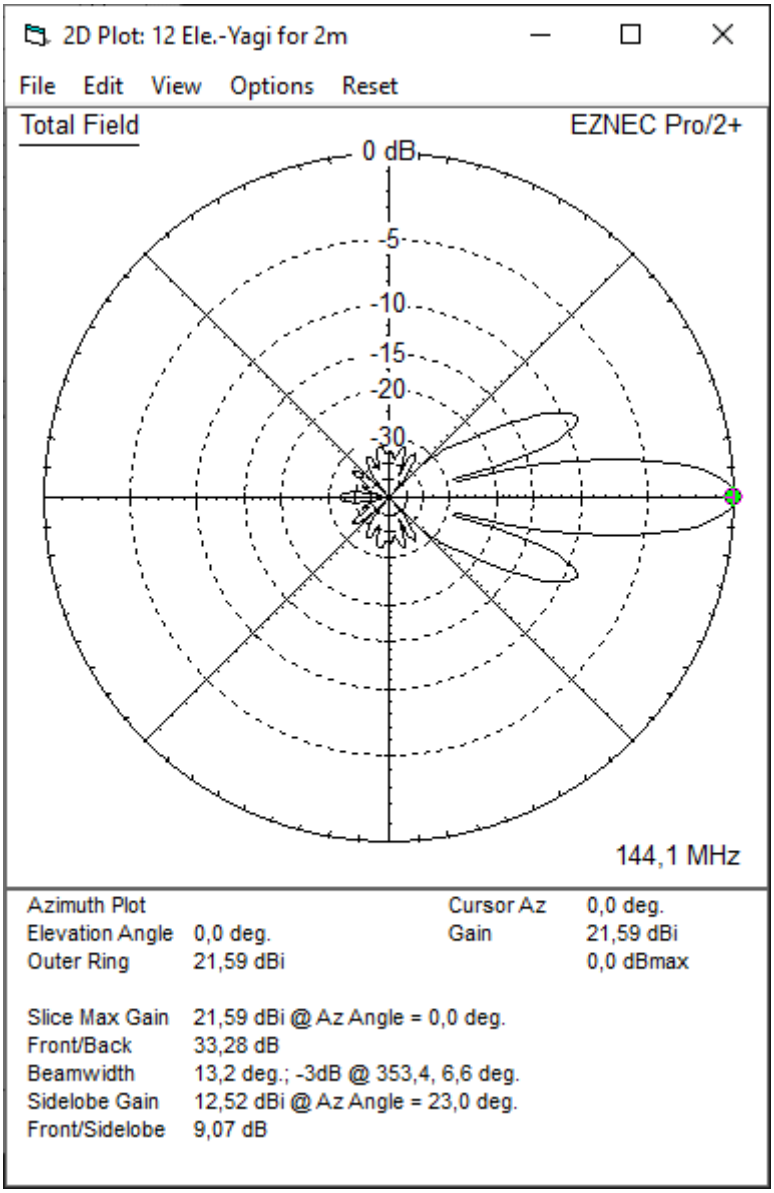

4 x GTV 2-12m mk2, 110% DL6WU, Azimuth plot

• **Radiation plots at 100% Stacking distance according DL6WU**

E-plane: 3.774 m
H-plane: 3.538 m

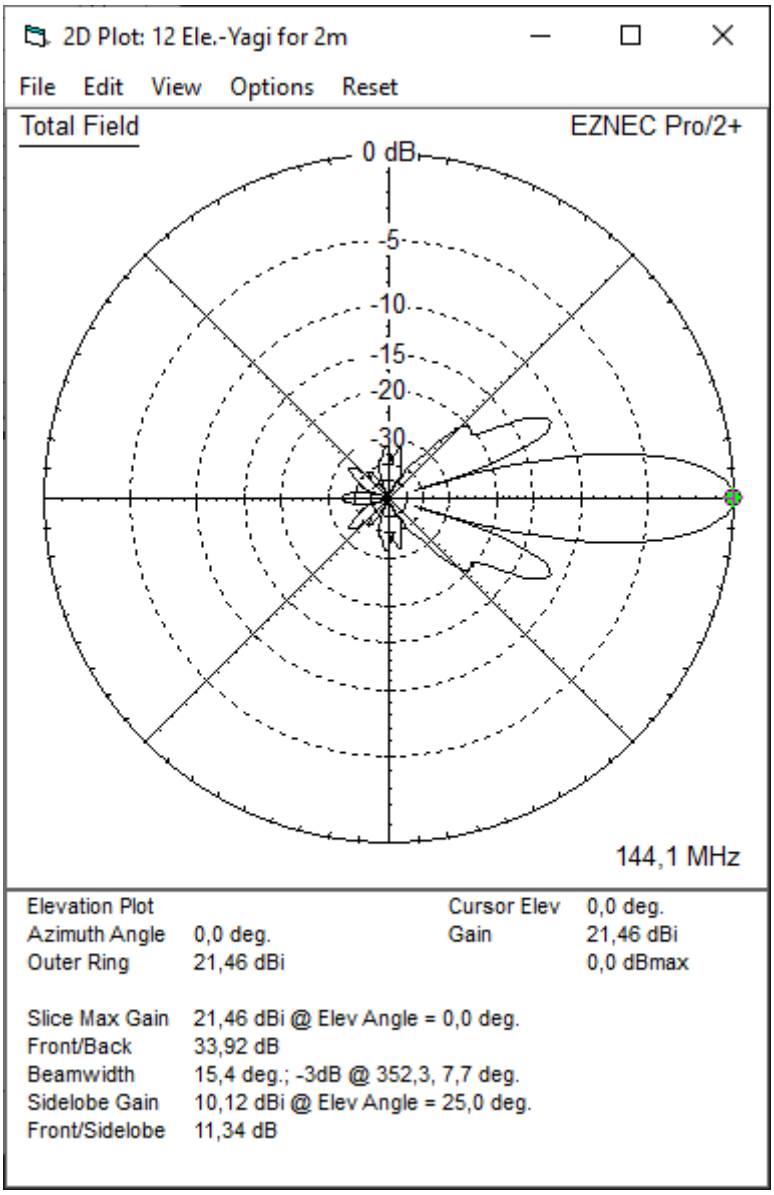

4 x GTV 2-12m mk2, 100% DL6WU, Elevation plot

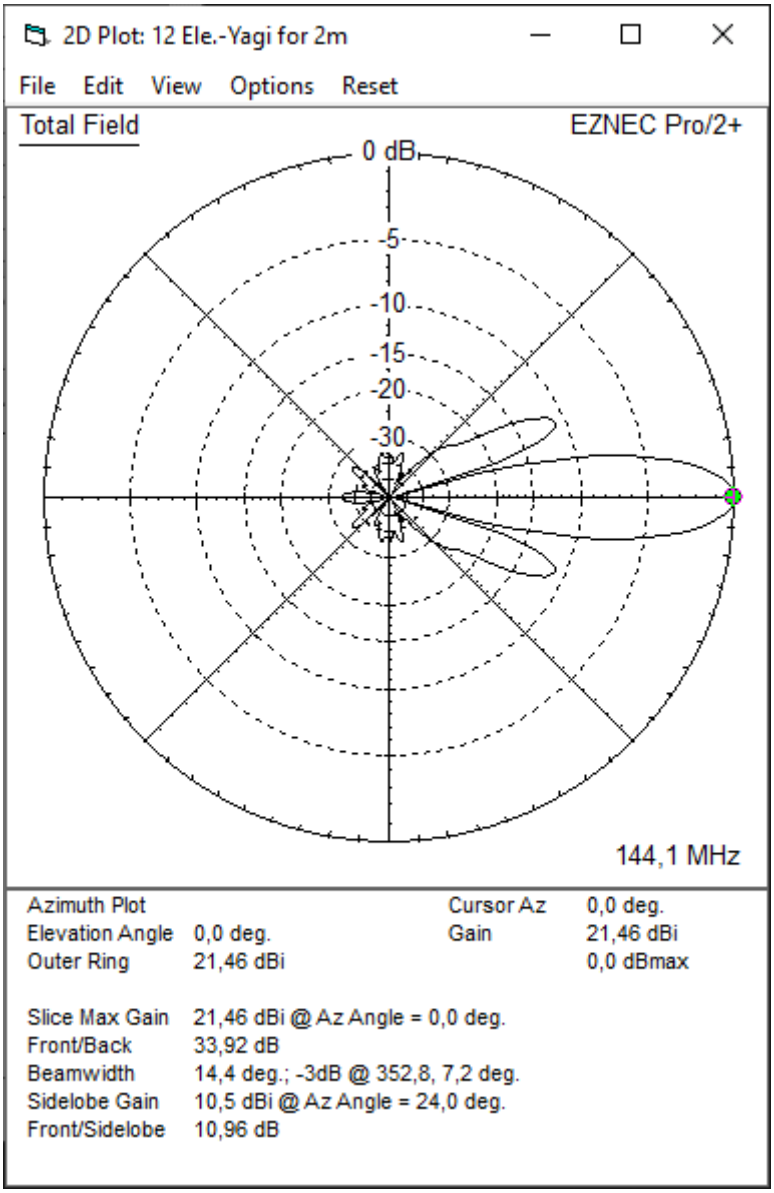

4 x GTV 2-12m mk2, 100% DL6WU, Azimuth plot

• **Radiation plots at 90% Stacking distance according DL6WU**

E-plane: 3.396 m
H-plane: 3.184 m

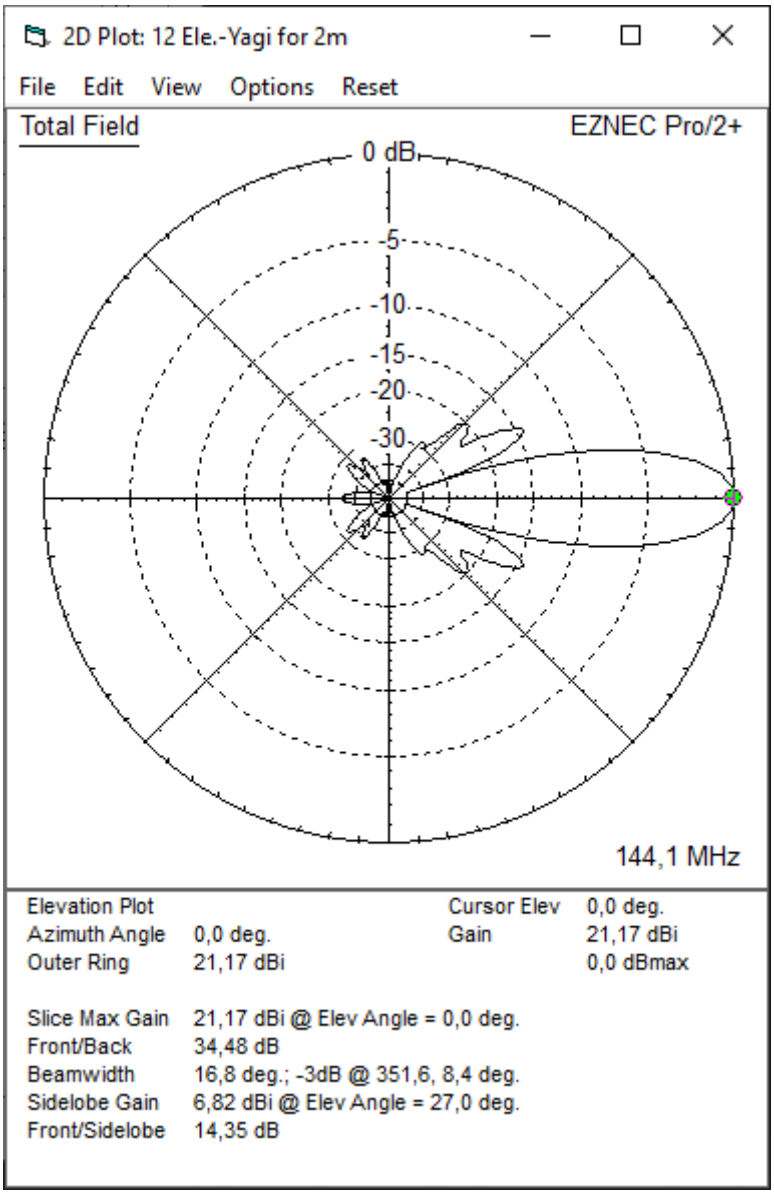

4 x GTV 2-12m mk2, 90% DL6WU, Elevation plot

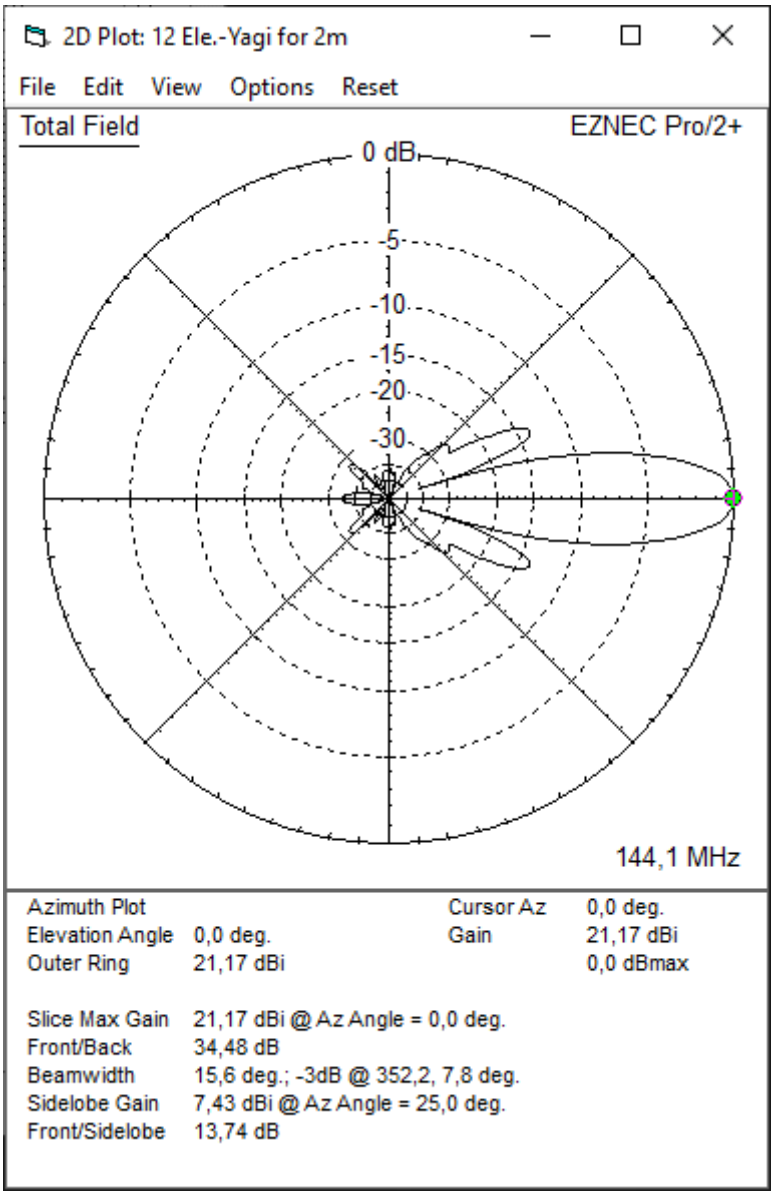

4 x GTV 2-12m mk2, 90% DL6WU, Azimuth plot

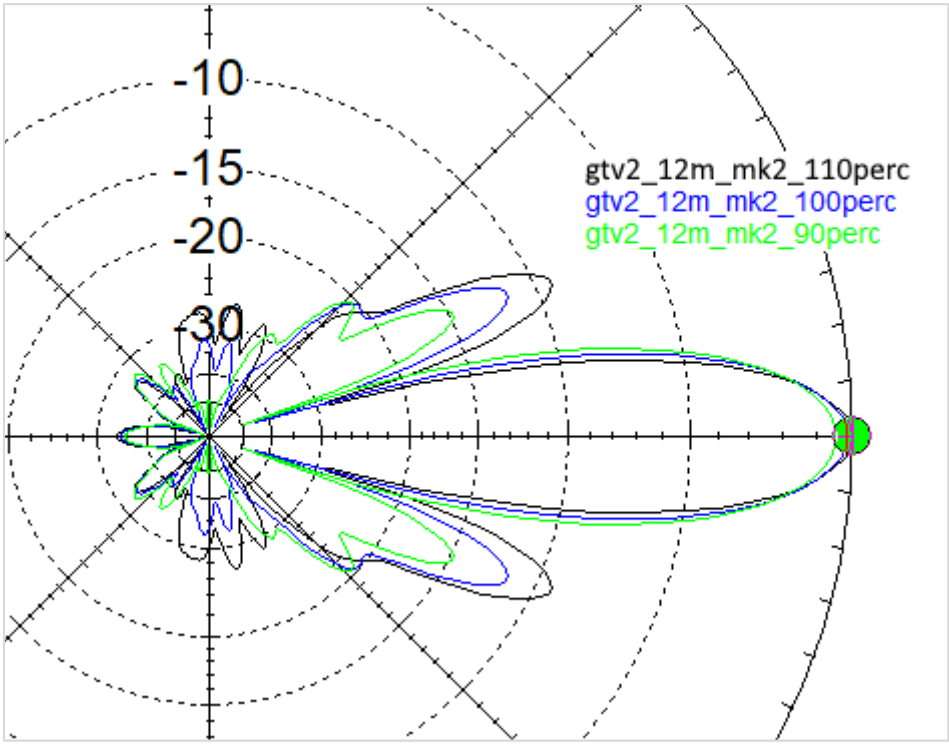

Overlay, Elevation patterns at 90%, 100%, 110% of Stacking Distances per DL6WU

Stacking distance according DL6WU			**90%**	**100%**	**110%**
		G (dBi)	21.17	21.46	21.59
Tearth (K)	**Tsky (K)**				
1600	**200**	Ttotal (K)	230.39	235.02	239.53
		G/Ta (dB)	-2.455	-2.251	-2.201
5400	**200**	Ttotal (K)	308.36	325.92	342.97
		G/Ta (dB)	-3.715	-3.662	-3.749
9000	**200**	Ttotal (K)	381.52	410.64	438.88
		G/Ta (dB)	-4.645	-4.675	-4.833

Table: Gain at 90%, 100%, 110% of Stacking Distances per DL6WU,
Ttotal & G/Ta at Tearth = 1600 K, 5400 K, 9000 K

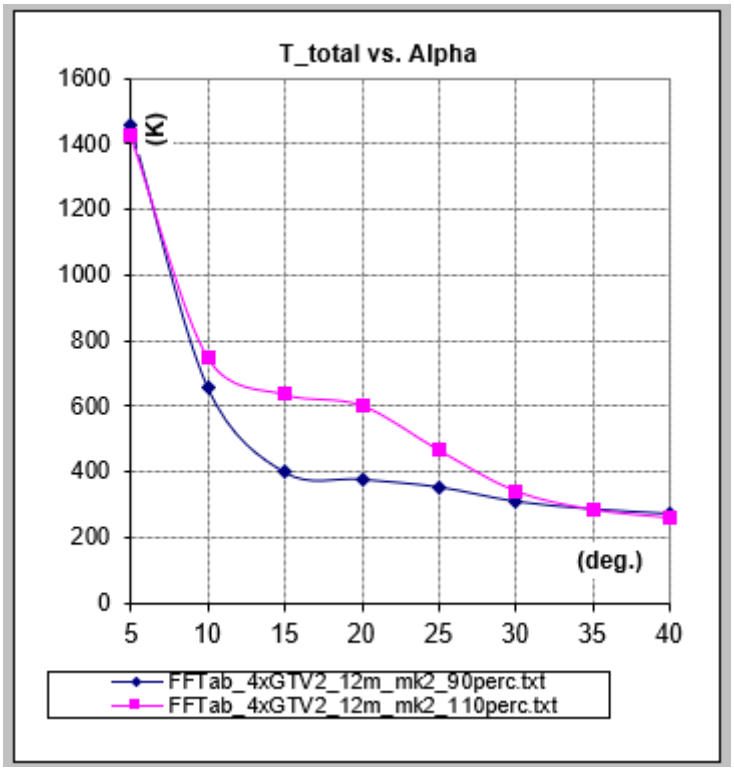

Comparison: Ttotal over alpha (Antenna elevation);
90% vs. 110% of Stacking Distances per DL6WU at Tearth= 5400 K, Tsky = 200 K